LIGHTING FIXTURE SCHEDULE (SEE SHEET SP2.0 & SP2.1 FOR CUTSHEETS)

Schedule

Symbol	Label	QTY	Manufacturer	Catalog	Description	Lamp Output	LLF	Input Power	MOUNTING HEIGHT
	A	98	Deco Lighting		D464-L-60-50-U-Z	6650	0.9	58	16' AFG
	A2	31	Deco Lighting		D464-L-60-50-U-Z	6650	0.9	58	10' AFG
	A3	25	Deco Lighting		D464-L-60-50-U-Z	6650	0.9	58	9' AFG
	B	31	DECO LIGHTING, LLC	D824-LED-60-40-UNV-LP--T5	15"L. X 13 3/8"W. X 3 5/8"H. LED FIXTURE 6 LED MODULES WITH 4 LEDS EACH WITH T5 OPTICS	7506	0.9	56	16' AFG

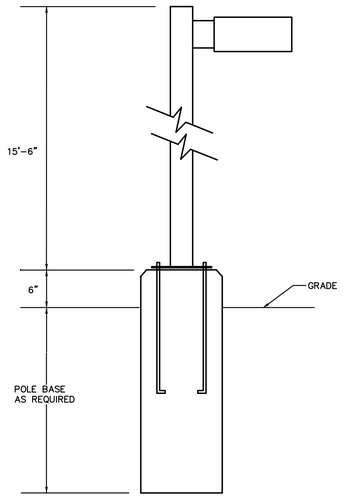

POLE BASE/PARKING LOT LIGHT FIXTURE DETAIL

NO SCALE

SITE PHOTOMETRIC NOTES

1. CALCULATIONS SHOWN REPRESENT MAINTAINED LIGHTING LEVELS IN FOOTCANDLES AT GRADE WITH A TOTAL LIGHT LOSS FACTOR AS SHOWN. CALCULATIONS DO NOT INCLUDE CONTRIBUTIONS FROM OTHER LIGHT SOURCES.

2. CIVIL BASE PLAN AS PROVIDED TO PARSONS ENGINEERING, INC. SHOWED NO OVERHEAD UTILITIES. THE CIVIL ENGINEER SHALL VERIFY THAT THERE ARE NO CONFLICTS WITH EXISTING OR PROPOSED UTILITY LINES OR EASEMENTS.

3. THESE CALCULATIONS HAVE BEEN GENERATED FROM MANUFACTURER SUPPLIED PHOTOMETRIC FILES. PARSONS ENGINEERING, INC. HAS MADE A REASONABLE ATTEMPT TO OBTAIN THE MOST CURRENT PHOTOMETRIC REPORT. PARSONS ENGINEERING, INC. IS NOT RESPONSIBLE FOR ERRANT RESULTS DUE TO MANUFACTURERS' QUALITY CONTROL OR DESIGN CHANGES.

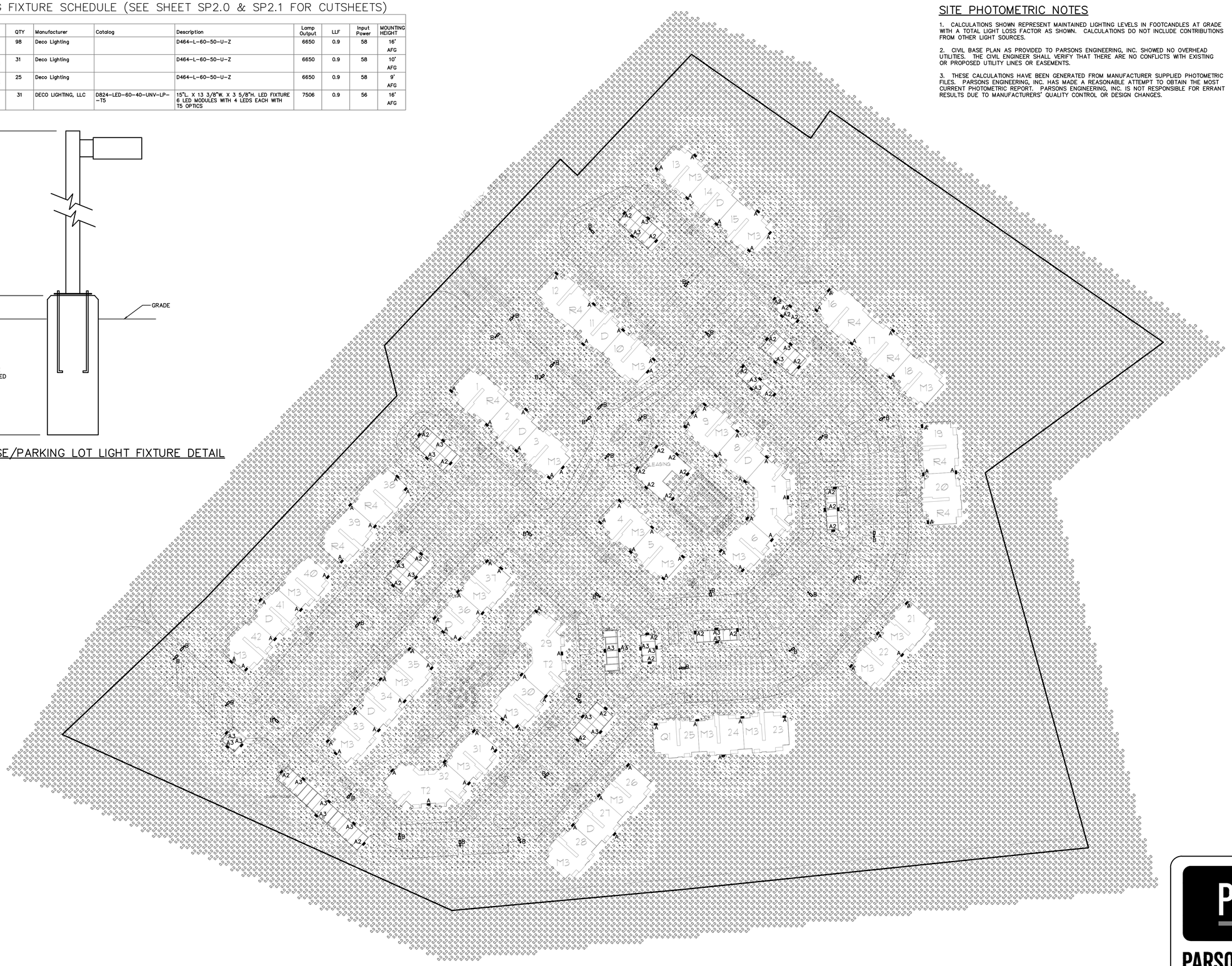

SITE PHOTOMETRIC PLAN

SCALE: 1"=80'

GF55

225 WEST 39TH STREET
NEW YORK, NY 10018
212 352 3099
GF55 ARCHITECTS, LLP 2026

HATHAWAY APARTMENTS
BLOUNT COUNTY, TENNESSEE

OWNER

MECHANICAL/PLUMBING ENGINEER

ELECTRICAL ENGINEER
PARSONS ENGINEERING

ISSUE

	PHOTOMETRIC	03.20.2026

SCALE
AS SHOWN

DRAWING
SITE
PHOTOMETRICS

PARSONS
ENGINEERING, INC.
NASHVILLE, TENNESSEE
PARSONSENGINEERING.COM

SEAL AND SIGNATURE

ANTHONY JOHN PEZZI
REGISTERED ENGINEER
No. 106010
STATE OF TENNESSEE
3/20/26

DATE: 03/20/2026
PROJECT NO: -
DRAWING BY: J.R.G.
CHK BY: A.J.P.
DWG NO:

SP1.0

SHEET NO.: ____ OF

Project: 26065 Drawing: 26065-SP1.0(b).dwg